Chloride Channels

Secondary article

Myles H Akabas, *Columbia University, New York, USA*

Chloride channels are integral membrane proteins whose functions are to regulate the movement of chloride ions across cellular membranes. They perform a vital role in physiological processes such as cell volume regulation, epithelial transport, the regulation of nerve and muscle cell membrane excitability and in determining the pH within cytoplasmic membrane-bound organelles.

Article Contents

- Introduction
- What Chloride Channels Do for a Cell
- Classes of Chloride Channels
- A Chloride Channel from the Electric Organ of *Torpedo*
- The ClC Family of Chloride Channels
- CFTR – a Regulated Chloride Channel
- Regulation of CFTR by Phosphorylation and by Nucleotide Binding
- Neurotransmitter-gated Chloride Channels
- Calcium-activated Chloride Currents
- Summary

Introduction

Ion channels are integral membrane proteins that form ion-selective, water-filled pores across cellular membranes. Chloride channels are a subset of ion channels that are selectively permeable to chloride and often to other small monovalent anions. Chloride channels are found in the plasma membranes of most cells and in the membranes of various intracellular organelles including the endoplasmic reticulum, Golgi apparatus, endosomes and sarcoplasmic reticulum. The physiological functions of chloride channels include stabilization of resting membrane potentials in muscle and nerve cells, transepithelial transport, cell volume regulation, signal transduction and acidification of intracellular organelles. Functionally distinct types of chloride channels mediate these different processes. These channels vary in the factors that control their gating, ion selectivity and conductance. Three structural families of chloride channels have been identified to date. These include the ClC channel family, the cystic fibrosis transmembrane conductance regulator (CFTR) and the γ-aminobutyric acid (GABA)-gated and glycine-gated neurotransmitter receptors. Functional data suggest that additional structural classes of chloride channels exist, but the genes encoding these channels have not yet been identified. Genetic defects in chloride channels and abnormal regulation of gating cause a variety of human diseases. This article will focus on the functional roles of chloride channels in cellular and organ physiology and on the structure, function and regulation of the various chloride channel families.

What Chloride Channels Do for a Cell

The effect of opening a chloride channel depends on the driving force for chloride movement across the cell membrane. The driving force is determined by the algebraic sum of the transmembrane concentration gradient for chloride and the transmembrane electrical potential. The driving force is called the chloride electrochemical potential. When a chloride channel opens, chloride ions may either enter or leave the cell depending on the direction of the chloride electrochemical gradient.

For plasma membrane chloride channels the concentration gradient is determined by the difference in the chloride concentration in the extracellular and intracellular fluid. Chloride is the major negatively charged ion in the extracellular fluid. In mammals the extracellular fluid chloride concentration is about $100\,\mathrm{mmol\,L^{-1}}$. The concentration of chloride inside cells is variable and depends on the types of chloride transport proteins present in the plasma membrane. If ion-coupled chloride transporters, such as the Na^+/Cl^- or $Na^+/K^+/2Cl^-$ cotransporters, are present in the plasma membrane, the intracellular chloride concentration tends to be high ($\sim 20\,\mathrm{mmol\,L^{-1}}$) (**Figure 1a**). In cells lacking these transporters, the chloride concentration is lower, about $5\,\mathrm{mmol\,L^{-1}}$ (**Figure 1b**). The resting transmembrane electrical potential is always negative inside cells, but the magnitude of the potential may range from $-30\,\mathrm{mV}$ to

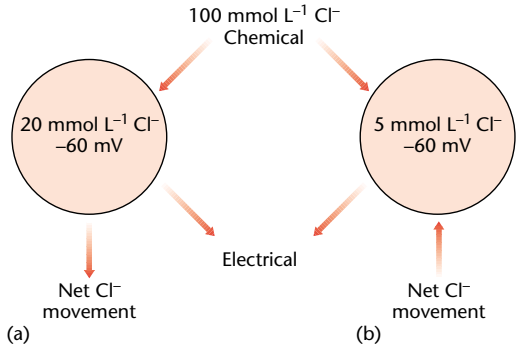

Figure 1 Direction of net chloride movement in two cells, one with high intracellular chloride (a) and one with low chloride (b). (a) When the intracellular chloride concentration is higher, the electrical force on the chloride ions dominates and chloride ions move out of the cell. (b) When the intracellular chloride concentration is low, the chemical driving force dominates and chloride moves into the cell.

− 90 mV. Thus, the concentration gradient always favours chloride movement into cells but the resting electrical potential always favours chloride movement out of cells. The balance between the two forces will determine the direction of chloride movement. If the chloride concentration is high inside the cell, the concentration gradient for chloride will be small and the effect of the electrical potential is likely to predominate. In this case, chloride will move out of the cell, depolarizing the cell membrane, i.e. reducing the inside negative electrical potential. On the other hand, if the chloride concentration inside the cell is small, there will be a large concentration gradient and it will probably overwhelm the electrical potential, resulting in chloride movement into cells, thereby hyperpolarizing the cell membrane, i.e. increasing the magnitude of the negative membrane potential.

Cell volume regulation and chloride channels

All cells must maintain their volume in order to survive. The ability to maintain cell volume in the face of osmotic stresses is an ancient homeostatic mechanism. If a cell swells, the membrane surrounding the cell will stretch and then rupture, releasing the contents of the cytoplasm and leading to cell death. To avoid rupture of the membrane, cells must maintain their volume. When cells are placed in dilute, hypotonic fluids they initially swell as water enters the cell osmotically. As the cell swells, volume sensors initiate a process (regulatory volume decrease) to release osmotically active particles, generally potassium and chloride ions, from the cell. In many cells this involves the activation of a volume-sensitive chloride current and a volume-sensitive potassium current, although in some cells volume-sensitive cotransporters and exchangers are activated. Activation of these chloride- and potassium-selective channels allows chloride and potassium to leak out of the cell, reducing the number of osmotically active particles in the cytoplasm. This allows the cell to shrink towards its normal volume. Single-channel recordings of volume-activated chloride currents suggest that they are formed by several types of chloride channels with distinct single-channel conductances and differing modulation by second messenger systems.

The activation of volume-sensitive currents and transporters appears to involve cytoplasmic second messenger systems. Cell swelling and shrinkage results in the dephosphorylation of some proteins and the phosphorylation of others. The phosphorylation events appear to involve protein kinase C and alterations in intracellular calcium concentration. While cell volume changes alter the activity of these second messenger systems, the identity of the primary volume sensor that detects changes in cell volume and activates the kinases and phosphatases remains uncertain.

Chloride channels in muscle cells

Skeletal muscle cells have a large resting chloride current that accounts for 70–80% of the resting membrane conductance. This is in contrast to most cells, in which the resting membrane conductance is mainly formed by a potassium current. Muscle cells maintain a low intracellular chloride concentration, so that chloride tends to flow into the muscle cells through constitutively open chloride channels. Thus, the chloride current helps to stabilize the negative resting membrane potential and prevents the cell membrane potential from spontaneously depolarizing (moving closer to zero potential), which would lead to the activation of voltage-dependent sodium and calcium channels and result in contraction of the muscle cell.

Patients with the genetic disease myotonia congenita have a very low resting muscle chloride current. As a result, they have hyperexcitable muscle cells. In these people individual muscle cells spontaneously contract in the absence of a signal from the nervous system. This results in muscle stiffness and inability to relax voluntary skeletal muscles. A similar disease has been described in mice and in goats.

Chloride channels in epithelia

Epithelia are tissues that line the interface between the body and the external world, such as the lining of the intestines, the lungs, the kidney tubules and the sweat glands. The cells that form epithelia are polarized; they have different sets of proteins in the cell membrane that faces the external world (apical membrane) compared with the side that faces into the body (basolateral membrane). Epithelia are capable of vectorial transport, that is of moving substances (ions, water, sugars, amino acids, etc.) from the exterior into the body (absorption) or from the body to the exterior (secretion). The direction of water movement across an epithelium is determined by the direction of ion transport across the epithelium; water follows the salt movement osmotically.

In chloride-secretory epithelia, such as the intestinal crypt cells or the pancreatic duct cells, the basolateral membrane contains ion-coupled chloride cotransporters and the apical membrane contains chloride channels (**Figure 2**). The ion-coupled cotransporters move chloride into the cells, raising its electrochemical potential inside the cells. Opening of the apical membrane chloride channels allows chloride to flow out of the cells down its electrochemical gradient into the intestinal lumen. The movement of negatively charged chloride draws positively charged sodium ions through the junctions between the cells and water follows osmotically. Thus, the amount of secretion is regulated by the extent to which the apical membrane chloride channels are open. When the channels are open, chloride is transported across the epithelium, from the body into the intestinal lumen, and fluid is secreted. When

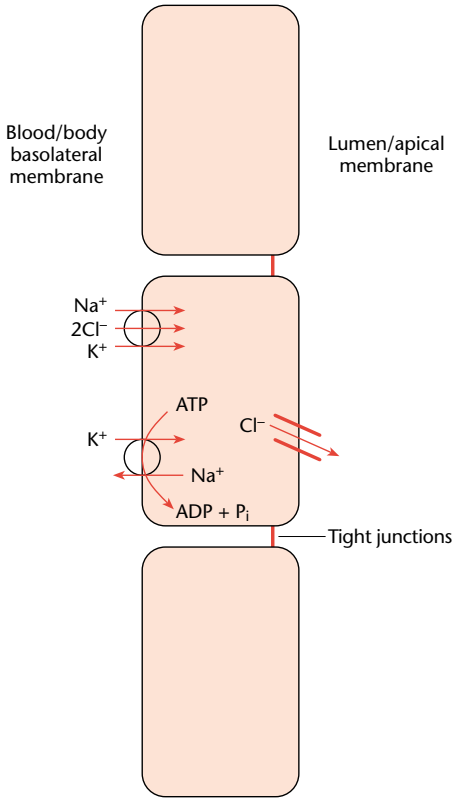

Figure 2 Schematic illustration of a chloride secretory epithelium such as the intestinal crypt cells. Chloride is transported across the basolateral membrane, into the cell, through the ion-coupled chloride cotransporter ($Na^+/K^+/2Cl^-$ cotransporter). This raises the intracellular chloride concentration so that, when the apical membrane chloride channel opens, chloride flows out of the cell into the lumen. This results in vectorial movement of chloride from the blood to the intestinal lumen.

the chloride channels are closed, no chloride or fluid moves. The extent to which the chloride channels are open, and therefore the amount of transepithelial chloride and fluid transport, is regulated by cAMP- and cGMP-dependent second messenger systems. Little is known about the sensors that detect the amount of transepithelial chloride transport and then regulate the activity of the second messenger systems.

Secretory diarrhoea is a major cause of infant mortality in the Third World. It results from the sustained activation of the cAMP- or cGMP-dependent intracellular second messenger pathways by various bacterial toxins, such as cholera toxin and heat-labile and heat-stable *E. coli* enterotoxins. Activation of the second messenger systems results in the sustained opening of the apical membrane chloride channels, leading to massive, unregulated fluid secretion by the intestinal lining.

In chloride-absorptive epithelia, such as the sweat ducts and the thick ascending limb of the loop of Henle in the kidney, the locations of the ion-coupled chloride cotransporters and the chloride channels are reversed, so that the transporters occur in the apical membrane and the channels in the basolateral membrane. This results in chloride transport from the lumen back into the body.

Chloride channels in nerve cells

Synaptic transmission, the process by which nerve cells communicate with each other, involves the release of a chemical, a neurotransmitter, by one cell (the presynaptic cell) and the binding of the neurotransmitter by receptors on the second cell (the postsynaptic cell). Depending on the neurotransmitter and the types of receptors that are activated, this can result in either excitation or inhibition of electrical activity in the postsynaptic cell. One class of neurotransmitter receptors are called ligand-gated ion channels. The binding of the neurotransmitter by these receptors results in the opening of an ion channel that is an integral part of the receptor protein. Such receptors for the neurotransmitters GABA and glycine contain chloride-selective channels. In most neurons, opening these channels results in chloride flowing into the cell, inhibiting the excitability of the postsynaptic cell. Inhibition of electrical excitability in the nervous system is essential for normal function. Strychnine, a poison that blocks the activity of the neuronal, inhibitory glycine-activate chloride channels, leads to an excess of electrical excitation in the nervous system, resulting in convulsions and death.

Regulation of pH inside membrane-bound cytoplasmic organelles

The cytoplasm of eukaryotic cells contains a variety of membrane-bound organelles such as the endoplasmic reticulum, the Golgi apparatus, the trans-Golgi network and the recycling endosomes. The pH inside these organelles is more acidic than the cytoplasmic pH. The acidic pH in these organelles is essential for the normal processing of newly synthesized integral membrane and secretory proteins. In addition, the retrieval and processing of endocytosed cell surface receptors requires the acidic pH environment found in the endosomes and the trans-Golgi network.

The membranes of these intracellular organelles contains a proton-ATPase that uses the energy derived from ATP hydrolysis to transport protons into the organelles. Because the protons are positively charged, this would create a large inside positive electrical potential that would inhibit further transport through the proton-ATPase. This would prevent the pH from decreasing. In order for enough protons to be transported to lower the pH, the electrical potential must be shunted. By opening a chloride channel in these organelles, negatively charged chloride ions move from the cytoplasm into the organelle. This dissipates the

inside positive electrical potential and allows more protons to be pumped, thereby lowering the pH inside the organelles. Thus, the magnitude of the chloride shunt conductance in part determines the magnitude of the intraorganellar pH.

Muscle contraction and calcium release from the sarcoplasmic reticulum

During muscle cell contraction, calcium stored inside the sarcoplasmic reticulum, a cytoplasmic membrane-bound organelle, is released into the cytoplasm by the opening of a calcium-selective channel in the sarcoplasmic reticulum membrane. Because calcium is a divalent cation, the flux of a small amount of calcium out of the sarcoplasmic reticulum would create a large inside negative electrical potential that would prevent further calcium efflux from the sarcoplasmic reticulum. To prevent the development of this electrical potential, calcium-sensitive chloride channels in the sarcoplasmic reticulum membrane open to help shunt the electrical potential. Thus, as calcium starts to flow out, the developing inside negative electrical potential pushes negatively charged chloride ions out of the sarcoplasmic reticulum, thereby neutralizing the potential. A cation-selective channel in the sarcoplasmic reticulum membrane also helps to shunt the membrane potential during calcium release. This allows the calcium to flow out of the sarcoplasmic reticulum into the cytoplasm, thereby producing a contraction of the muscle cell.

Classes of Chloride Channels

Ion channels are frequently classified on the basis of three functional properties: selectivity, conductance and gating. Selectivity refers to the process of determining the type(s) of ions that can permeate through the channel; this is similar to the substrate specificity displayed by enzymes. Different chloride channels may display varying degrees of selectivity between monovalent anions (e.g. Cl^- vs Br^- vs HCO_3^-), between monovalent and polyvalent anions (e.g. Cl^- vs SO_4^{2-}) and between anions and cations. In general, chloride channels display little selectivity between small monovalent anions and are poorly permeable to polyvalent anions, although there are certainly exceptions. Conductance refers to the rate of ion translocation through the channel, which is usually around 10^7 to 10^8 ions s^{-1}. Gating refers to the processes that control the transitions of the channel from the closed, nonconducting state to the open, ion-permeable state. In different chloride channels, gating is controlled by ligand binding, transmembrane voltage, phosphorylation and intracellular calcium binding. Using electrophysiological techniques, such as patch clamp recording, different families of chloride channels have been distinguished on the basis of their ionic selectivity, their single-channel conductances and the regulation of channel gating. Using molecular-biological and biochemical approaches, the genes encoding three different families of chloride channels have been identified and cloned. These include the ClC family (**Figure 3a**), the cystic fibrosis transmembrane conductance regulator (CFTR) (**Figure 3b**) and the GABA- and glycine-gated neurotransmitter receptor chloride channels (**Figure 3c**). The structure and functional properties of these channel families will be discussed below.

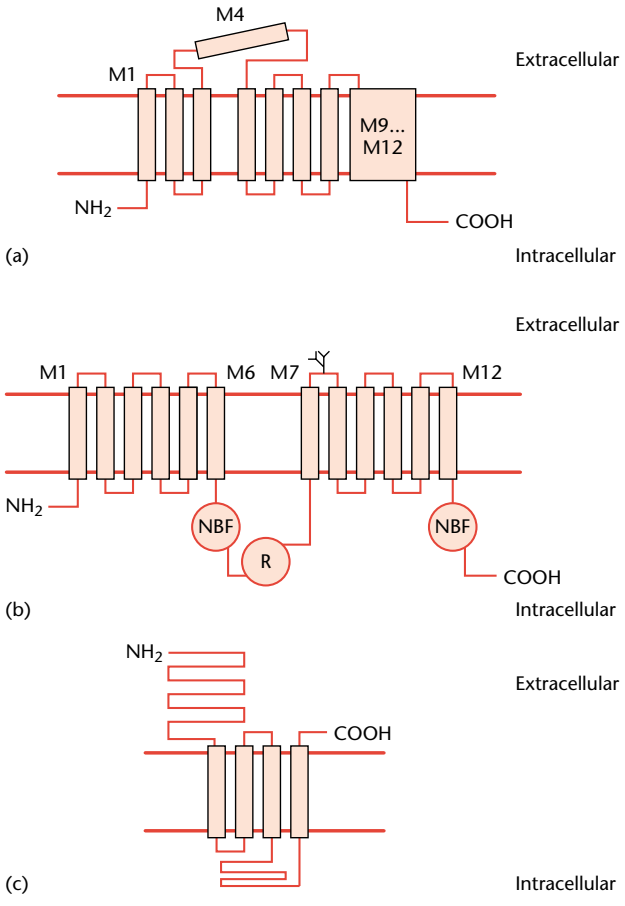

Figure 3 Schematic illustration of the transmembrane topology of the three classes of chloride channels that have been cloned. (a) ClC channel. The topology and the limits of specific transmembrane segments have not been clearly defined. The M4 segment was initially thought to span the membrane but was subsequently shown to be in the extracellular domain. Despite this, the numbering has been retained to avoid confusion with earlier work. (b) CFTR: NBF, nucleotide binding fold; R, regulatory domain, the location of multiple phosphorylation sites. (c) GABA or glycine receptor subunit; the entire receptor is formed by the assembly of five subunits. NH_2 indicates the amino-terminus of the protein, COOH indicates the carboxy-terminus of the protein.

A Chloride Channel from the Electric Organ of *Torpedo*

The *Torpedo* electric rays use electric shocks generated by a specialized electric organ to stun their prey. The cells of the electric organ contain a chloride channel that is nearly ideally anion-selective and whose gating is controlled by the transmembrane voltage. The channel has the unique property that in single-channel recordings it always exists as a pair of independently gating channels. This obligate pairing was likened to a double-barrelled shotgun: that is, there are two identical, independent pathways for chloride movement through the protein. The gene encoding this channel was cloned. It was the first member of the ClC chloride channel family, named ClC-0.

The ClC-0 gene contains an open-reading frame that encodes a protein of 805 amino acids. Hydrophobicity analysis of the amino acid sequence and experimental results suggest that the protein contains 10 or possibly 12 membrane-spanning segments, some of which presumably contribute to the channel lining (**Figure 3a**). The protein homodimerizes with each monomer, forming a single independent channel, thereby explaining the double-barrelled shotgun channel seen in the single-channel recordings.

The gating of the ClC-0 channel is dependent both on the concentration of the permeant anion in the extracellular fluid and on the transmembrane voltage. The voltage dependence of gating appears to involve the movement of a permeant anion from the extracellular end of the channel to an anion-binding site near the cytoplasmic end of the channel. The more positive the intracellular voltage, the more likely it is that an anion will occupy the binding site. When the anion binding site is occupied, the channel opens more rapidly. This suggests that, even in the closed, nonconducting state, the lumen of the channel is accessible to ions from the extracellular end and that the gate, the structure that blocks ion conduction in the closed state of the channel, is located near the cytoplasmic end of the channel. This mechanism in which voltage-dependent gating arises from an interaction of the transmembrane voltage with a permeating anion is in marked contrast to the mechanism of voltage-dependent gating observed in voltage-dependent potassium and sodium channels. In these channels, voltage dependence arises from an interaction of the transmembrane voltage with a charged voltage sensor that is an integral part of the channel protein.

The ClC Family of Chloride Channels

Following the initial cloning of the ClC-0 chloride channel from the *Torpedo* electric organ, nine homologous mammalian genes were cloned and named, ClC-1 to ClC-7, ClC-Ka and ClC-Kb. The members of the gene family are differentially expressed and are involved in different physiological processes.

Skeletal muscle chloride channel, ClC-1

The ClC-1 channel is predominantly expressed in skeletal muscle cells. Its inferred amino acid sequence is 54% identical to the sequence of ClC-0. Support for the hypothesis that ClC-1 forms the resting muscle chloride current comes from the fact that people with the inherited disease myotonia congenita have low resting muscle chloride currents and have mutations in the gene encoding ClC-1. Over twenty different mutations have been identified in different families with this disease. Furthermore, mutations in ClC-1 have also been identified in animal models of myotonia in mice and goats. Unlike the ClC-0 channel, the single-channel conductance of ClC-1 is small, about 1 pS. An important structural determinant of the charge-selectivity filter that discriminates between anions and cations was identified near the carboxy-terminal end of the third putative membrane-spanning segment.

Volume-sensitive chloride currents and ClC-2 and ClC-3

The molecular basis for volume-sensitive chloride currents is still a hotly debated subject, but accumulating evidence suggests that the ClC-2 and ClC-3 channels are likely potential candidates. Unlike ClC-1, ClC-2 and ClC-3 are ubiquitously expressed in most cell types, consistent with the wide distribution of volume-sensitive chloride currents. Initially ClC-2 was widely touted as the volume-sensitive chloride current. Heterologous expression of ClC-2 increases the volume-sensitive chloride current, suggesting that it may play a role in this process; however, the functional properties of ClC-2 and its regulation by osmotic stress are not identical with the properties of the volume-sensitive chloride current. In contrast, ClC-3 has emerged as a strong candidate. Following heterologous expression, its functional properties are similar to swelling-activated chloride currents. A specific serine residue in the cytoplasmic amino-terminal domain of the protein has been shown to be phosphorylated and dephosphorylated in a volume-sensitive manner by protein kinase C and an unknown protein phosphatase. Mutation of that serine residue eliminates volume-sensitive activation of ClC-3 currents. Thus, it appears that ClC-3 may be a molecular basis for a portion of the volume-sensitive chloride current. Given the heterogeneity observed in single-channel recordings of volume-sensitive chloride currents, it is likely that other, perhaps as yet uncloned, chloride channels are also involved.

ClC isoforms and the kidney

The ClC-5 isoform is predominantly expressed in the kidney where it has a highly specific pattern of expression on the apical membranes and in the endosomes of proximal tubular cells and of α-intercalated cells in the distal tubule and cortical collecting duct. Both of these cell types also express a plasma membrane proton-ATPase. ClC-5 seems to colocalize with the proton-ATPase as it cycles from the plasma membrane to the endosomal compartment. Mutations in the ClC-5 gene have been implicated in the aetiology of Dent disease, which is characterized by low-molecular weight proteinuria, high urinary calcium levels and an increased frequency of forming calcium-based kidney stones. In the kidney, low-molecular weight proteins that are filtered through the glomerulus are endocytosed and degraded by cells of the proximal tubule, thus preventing their excretion in the urine. The absence of ClC-5 in patients with Dent disease leads to a failure of this process for clearing small proteins from the urine, possibly because in the absence of ClC-5 the chloride shunt conductance is missing so that the proton-ATPase cannot acidify the endosomal vesicles containing the endocytosed proteins, thereby inhibiting their degradation.

The kidney is also the predominant site of expression of two other ClC homologues. ClC-Ka is mainly expressed in the cortical thick ascending limb of the loop of Henle and in the distal convoluted tubule. In contrast, ClC-Kb is diffusely expressed both in the glomerulus and along the entire tubule. The physiological functions of these channels remains to be determined.

CFTR – a Regulated Chloride Channel

Cystic fibrosis is the most common lethal genetic disease in caucasians. It is a multisystem disorder characterized by defective chloride transport in a variety of epithelial organs including the lungs, pancreas, intestines and sweat glands. The disease is transmitted in an autosomal recessive manner. The affected gene, named the cystic fibrosis transmembrane conductance regulator (CFTR), was cloned in 1989. To date over 600 mutations in the CFTR gene have been identified in patients with cystic fibrosis.

The CFTR gene encodes a protein of 1480 amino acids. Hydropathy analysis, amino acid sequence analysis and experimental results suggest that CFTR is formed as a tandem repeat. The first half contains six membrane-spanning segments and a cytoplasmic nucleotide-binding fold (**Figure 3b**). The second half contains six more membrane-spanning segments and a second nucleotide-binding fold. The two halves are connected by a cytoplasmic regulatory domain that contains multiple cAMP-dependent protein kinase phosphorylation sites. Recent work suggests that the functional channel may be a dimer, but this remains to be demonstrated.

CFTR forms a low-conductance ($\sim$7–9 pS), nonrectifying chloride channel. The channel is permeable to many small anions but is poorly permeable to cations. A positively charged amino acid near the cytoplasmic end of the channel appears to be a major determinant of the channel's ability to allow anions to permeate while excluding cations. In addition, in heterologous expression systems CFTR seems to serve as a regulator of the activity of a variety of other ion transporters and channels: whether this is physiologically important *in vivo* remains to be demonstrated.

Regulation of CFTR by Phosphorylation and by Nucleotide Binding

CFTR is expressed in the cells of chloride-transporting epithelia. In the epithelial cells its distribution in the plasma membrane is polarized. It is in the apical membrane in secretory epithelia, and in the basolateral membrane in absorptive epithelia. The CFTR-induced chloride current is the rate-limiting step in the transepithelial chloride transport process. Thus, the extent of activation of CFTR determines the rate of fluid transport across the epithelium.

Gating of the CFTR channel involves two processes. A necessary step for channel opening is the phosphorylation of the cytoplasmic regulatory domain at multiple sites by either cAMP- or cGMP-dependent protein kinases. The phosphorylation by itself does not open the channel. Gating the phosphorylated channel open and closed requires the binding and hydrolysis of adenosine triphosphate (ATP) at the nucleotide-binding folds. Protein phosphatases dephosphorylate CFTR, thereby forcing the channel to close. In cells, since ATP is always present in the cytoplasm, the activity of the channel, and thus the extent of transepithelial chloride transport, is regulated by the extent of phosphorylation. This is determined by the net activity of the kinases and phosphatases, which is in turn regulated by the rates of production and degradation of cAMP and cGMP.

Neurotransmitter-gated Chloride Channels

GABA and glycine are the major inhibitory neurotransmitters in the mammalian central nervous system. Fast-acting, ligand-gated ion channels form one class of receptors for these neurotransmitters. The gating of these channels is controlled by ligand binding. Ligand binding stimulates the opening of a chloride-selective channel that is an integral part of the receptor protein. In the continued presence of the neurotransmitter, the channels enter a

nonconducting, desensitized state. Following removal of the neurotransmitter, the channels return to the closed state.

The receptors are formed by the assembly of five structurally similar subunits. The subunits are arranged pseudo-symmetrically around a central axis that is perpendicular to the plain of the membrane. The chloride channel runs along the channel axis and is lined by amino acids from each of the subunits. Each subunit is composed of two domains. There is a 200–250-amino-acid amino-terminal, extracellular domain that contains the neurotransmitter binding sites and a similar-sized carboxy-terminal domain containing four membrane-spanning segments (**Figure 3c**). Amino acids from the membrane-spanning segments form the chloride channel lining. The gate that blocks ion flow in the closed state of the channel appears to be located near the cytoplasmic end of the channel, as are the charge and size selectivity filters.

The GABA receptors are the targets for a variety of drugs that are used in clinical medicine. These drugs are used to induce general anaesthesia and to treat conditions such as epilepsy and anxiety. In addition, the GABA receptors are the targets for toxins such as the cyclodiene insecticides. In insects, a point mutation in a putative channel-lining residue in the second membrane-spanning segment induces resistance to the cyclodiene insecticides.

Calcium-activated Chloride Currents

Many cells have calcium-activated chloride currents. In some cells these currents have a role in cell volume regulation, but in many cells the physiological role of these currents has not been determined. On the basis of single-channel recordings, there are probably several different calcium-activated chloride channels, but the proteins that form these channels have not been identified or cloned.

Summary

Although chloride channels are often neglected in favour of studies of cation-selective channels, physiologists are developing a greater appreciation of the diversity of chloride channels and of their importance for normal cell and organ physiology. The cloning of three families of chloride channels has provided structural tools that have greatly facilitated studies of their physiological functions. It is to be hoped that in the near future other chloride channels will be cloned that will provide a more complete picture of the structural basis for cellular chloride currents. This in turn will allow more detailed studies of the role of chloride channels in normal physiology and in various diseases.

Further Reading

Akabas MH, Cheung M and Guinamard R (1997) Probing the structural and functional domains of the CFTR chloride channel. *Journal of Bioenergetics and Biomembranes* **29**: 453–463.

Al-Awqati Q (1995) Chloride channel of intracellular organelles. *Current Opinion in Cell Biology* **7**: 504–508.

Gadsby DC and Nairn AC (1999) Control of CFTR channel gating by phosphorylation and nucleotide hydrolysis. *Physiological Reviews* **79**: S77–S107.

George AL Jr (1998) Chloride channels and endocytosis: ClC-5 makes a dent. *Proceedings of the National Academy of Sciences of the USA* **95**: 7843–7845.

Hevers W and Luddens H (1998) The diversity of $GABA_A$ receptors. Pharmacological and electrophysiological properties of $GABA_A$ channel subtypes. *Molecular Neurobiology* **18**: 35–86.

Hille B (1992) *Ionic Channels of Excitable Membranes*, 2nd edn. Sunderland, MA: Sinauer Associates.

Jentsch TJ and Gunther W (1997) Chloride channels: an emerging molecular picture. *Bioessays* **19**: 117–126.

Rabow LE, Russek SJ and Farb DH (1995) From ion currents to genomic analysis: recent advances in $GABA_A$ receptor research. *Synapse* **21**: 189–274.

Steinmeyer K and Jentsch TJ (1998) Molecular physiology of renal chloride channels. *Current Opinion in Nephrology and Hypertension* **7**: 497–502.

Strange K, Emma F and Jackson PS (1996) Cellular and molecular physiology of volume-sensitive anion channels. *American Journal of Physiology* **270**: C711–730.